NOTES:

1. BLOCKS DESIGNED FOR 100 P.S.I. PRESSURE, FOR HIGHER PRESSURES CONTACT ENGINEER.
2. VERTICAL BENDS DOWNWARDS (3" AND GREATER) SHOULD BE INDIVIDUALLY DESIGNED USING FLANGED OR RESTRAINED JOINTS.
3. CONCRETE FOR THRUST BLOCKS TO BE 3750 P.S.I. LAID TO UNDISTURBED BEARING WALL OF THE TRENCH IN THE FORM OF A WEDGE WITH THE WIDE END AGAINST THE TRENCH WALL.
4. THRUST BLOCKING IS REQUIRED FOR ALL FORCE MAIN LOCATIONS WHERE THE MAIN CHANGES DIRECTION BY 11.25° OR MORE.
5. A THREE (3") INCH SAND CUSHION REQUIRED BETWEEN FITTING AND THRUST BLOCK

SIZE OF THRUST BLOCK IN SQUARE INCHES

TYPE OF SOIL	1/32 (11-1/4°) & 1/16 (22 1/2°) BEND					1/8 (45°) BEND					1/4 (90°) BEND					TEE & END PLUG					IN LINE VALVE
	1.5"	2"	2.5"	3"	4"	1.5"	2"	2.5"	3"	4"	1.5"	2"	2.5"	3"	4"	1.5"	2"	2.5"	3"	4"	
LOOSE SAND & GRAVEL, SOFT CLAY	20	30	40	60	100	40	60	80	110	190	70	100	140	210	340	50	70	100	150	240	COORDINATE WITH ENGINEER
COMPACTED SAND & GRAVEL, DENSE SILT, FIRM TILL & STIFF CLAY	10	20	20	30	50	20	30	40	60	100	40	50	70	110	170	30	40	50	80	120	
VERY STIFF CLAY, DENSE TILL, SHALE OR ROCK	10	10	20	20	40	20	20	30	40	70	30	40	50	70	120	20	30	40	50	80	

SIZE OF THRUST BLOCK IN SQUARE FEET

TYPE OF SOIL	1/32 (11-1/4°) & 1/16 (22 1/2°) BEND					1/8 (45°) BEND					1/4 (90°) BEND					TEE & END PLUG					IN LINE VALVE
	6"	8"	10"	12"	16"	6"	8"	10"	12"	16"	6"	8"	10"	12"	16"	6"	8"	10"	12"	16"	
LOOSE SAND & GRAVEL, SOFT CLAY	2	3	5	7	12	4	6	9	13	23	6	10	16	24	42	4	8	12	17	30	COORDINATE WITH ENGINEER
COMPACTED SAND & GRAVEL, DENSE SILT, FIRM TILL & STIFF CLAY	1	1	2	3	4	1	2	3	5	8	2	4	6	8	14	2	3	4	6	10	
VERY STIFF CLAY, DENSE TILL, SHALE OR ROCK	1	1	1	2	2	1	1	2	3	4	1	2	3	4	7	1	1	2	3	5	

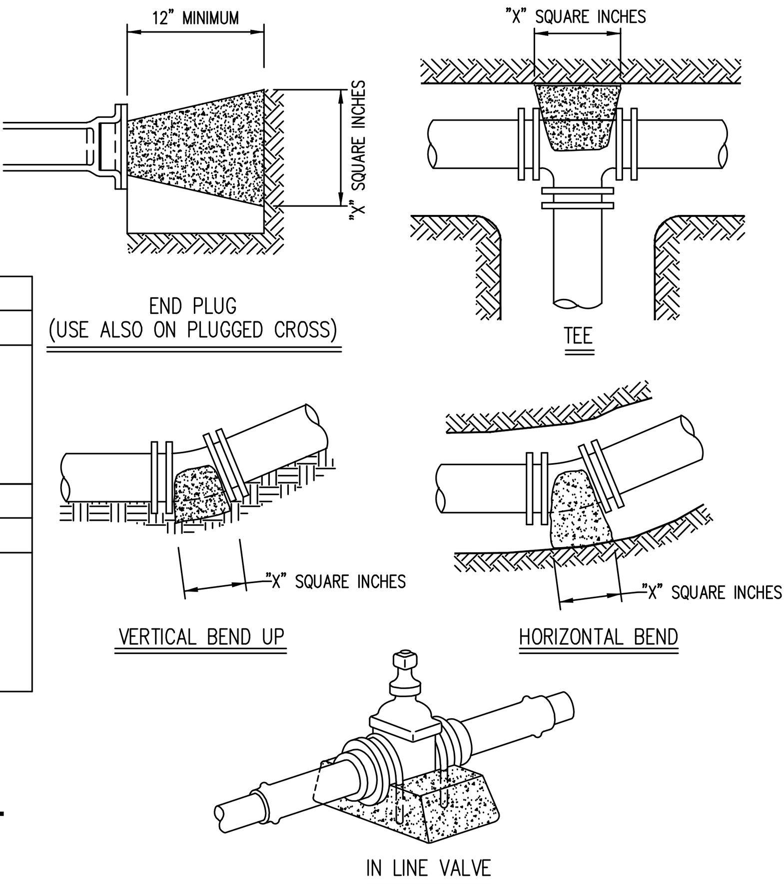

FORCE MAIN THRUST BLOCKING DETAIL

NO SCALE

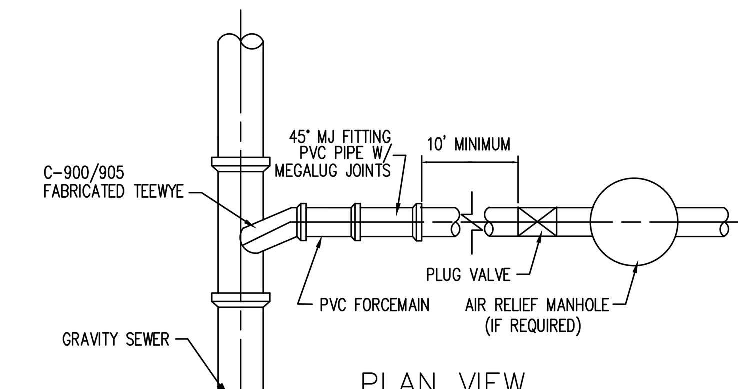

NOTES:

1. ALL MANHOLES WITHIN 200' MUST HAVE BOLT DOWN CASTINGS. (THEY MAY NOT BE USED AS A RELIEF MANHOLE.)
2. FORCE MAINS MUST BE SMALLER THAN THE GRAVITY MAIN.
3. ALL MJ JOINTS MUST BE RESTRAINED OR MEGALUG TYPE WITH STAINLESS STEEL RESTRAINING BOLTS AND RODS

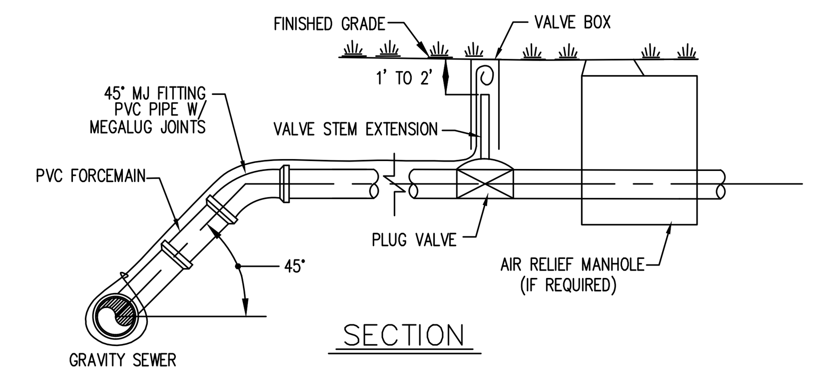

FORCEMAIN TO GRAVITY SEWER DETAIL

NO SCALE

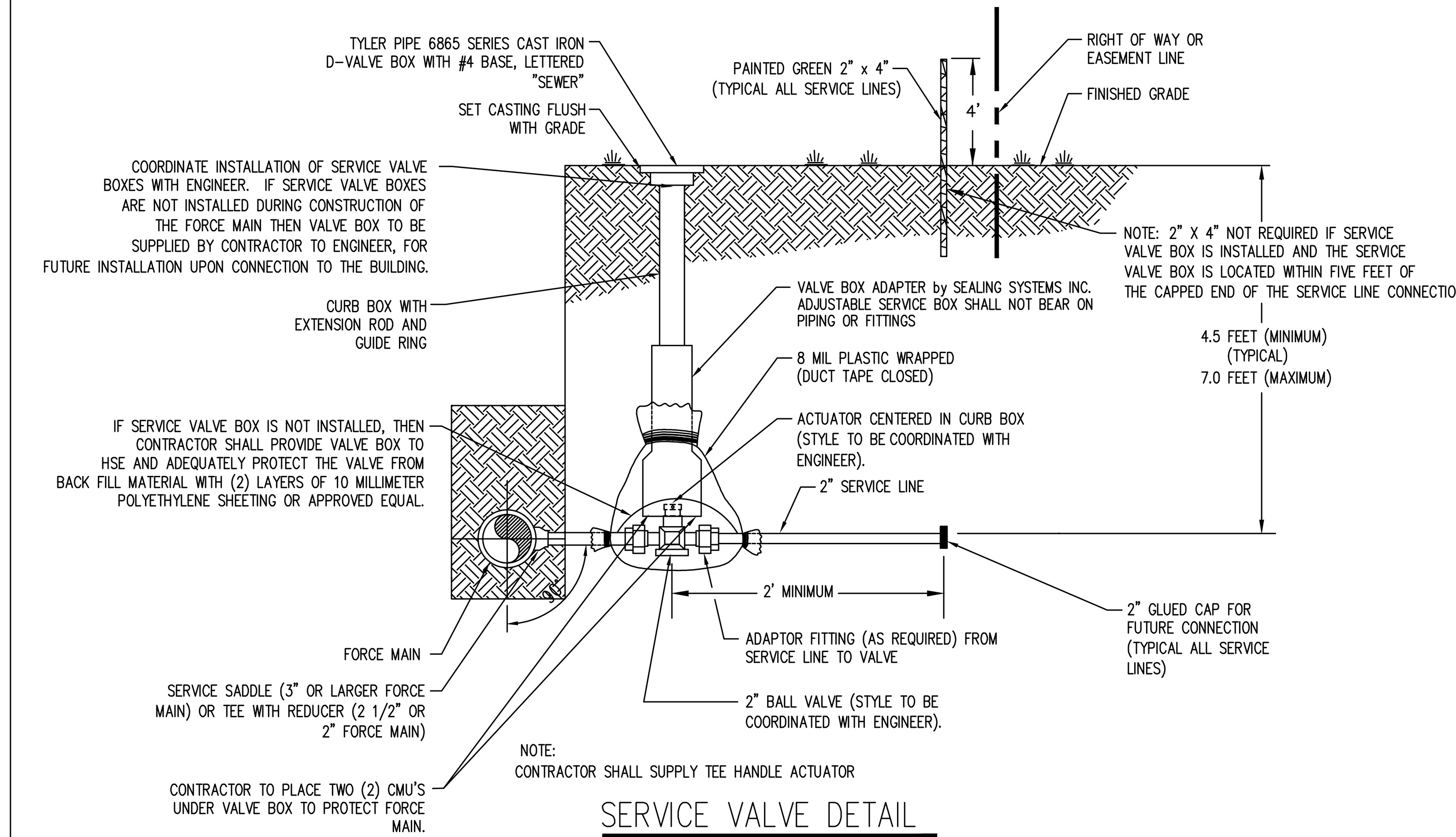

NOTE:
CONTRACTOR SHALL SUPPLY TEE HANDLE ACTUATOR

SERVICE VALVE DETAIL

NO SCALE

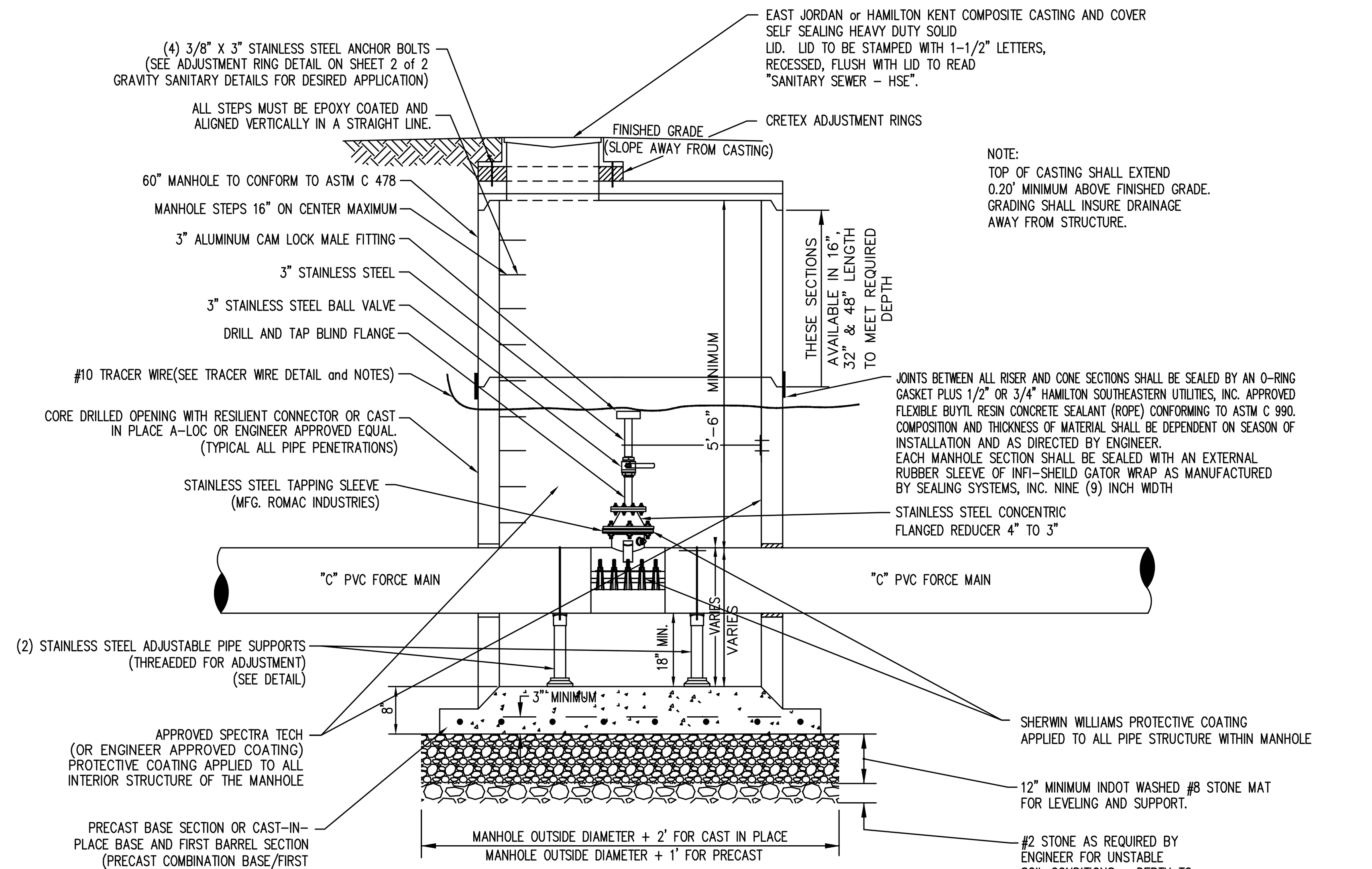

NOTE:
TOP OF CASTING SHALL EXTEND 0.20' MINIMUM ABOVE FINISHED GRADE. GRADING SHALL INSURE DRAINAGE AWAY FROM STRUCTURE.

NOTE: FOR DIMENSION "C" PLEASE SEE DIMENSION CHART ON LIFT STATION PLAN SHEET

NOTE:
ALL AIR RELEASE VALVE AND CLEAN OUT MANHOLES TO BE 5'-0" IN DIAMETER

CLEAN-OUT MANHOLE DETAIL

NO SCALE

NOTE: CONTRACTOR SHALL CONTACT THE UTILITIES ENGINEER PRIOR TO PURCHASING ANY EQUIPMENT FOR THIS LIFT STATION TO VERIFY PROPER INTERPRETATION OF SPECIFICATIONS AND PLANS.

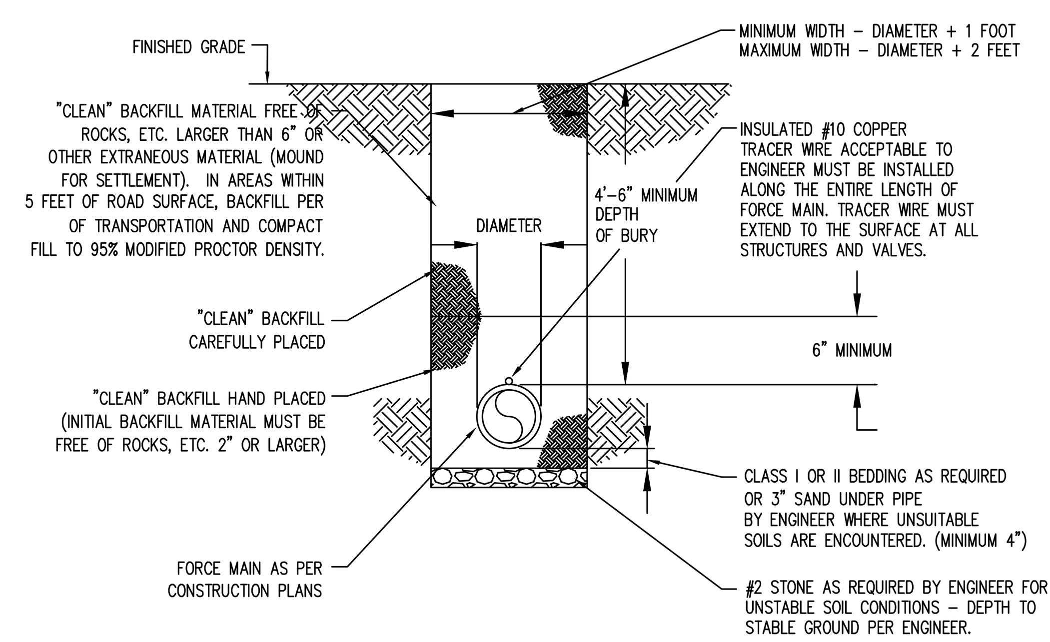

FORCE MAIN TRENCH DETAIL

NO SCALE

NOTES:

1. MANHOLE TO BE LOCATED SUCH THAT AIR/VACUUM DOES NOT INTERFERE WITH ACCESS OPENING.
2. TOP OF CASTING SHALL EXTEND
3. MANHOLE SECTIONS SHALL CONFORM TO ASTM C 478 UTILIZING 4,000 PSI CONCRETE. JOINTS SHALL CONFORM TO ASTM C 443. SIX (6) INCH AND EIGHT (8) INCH BOX STRUCTURES FOR LARGER FORCEMAIN SIZES.
4. CONTRACTOR TO PROVIDE OPTIONAL VALMATIC CLEANING CONNECTIONS AND HOSES
5. #10 TRACER WIRE TO BE CARRIED AROUND MANHOLE ENTRANCE AND SUPPORTED IN A TAPCO® MODEL NUMBER 113781A ROUND DOME UTILITY MARKER, WHITE POLE 66"H, 42" ABOVE GROUND, GREEN TOP UTILITY MARKER TO BE LOCATED OUTSIDE THE MANHOLE (SEE DETAIL).

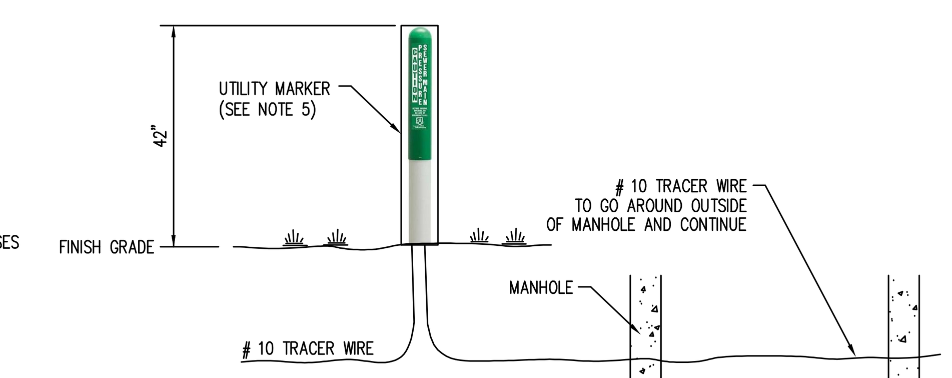

TRACER WIRE DETAIL

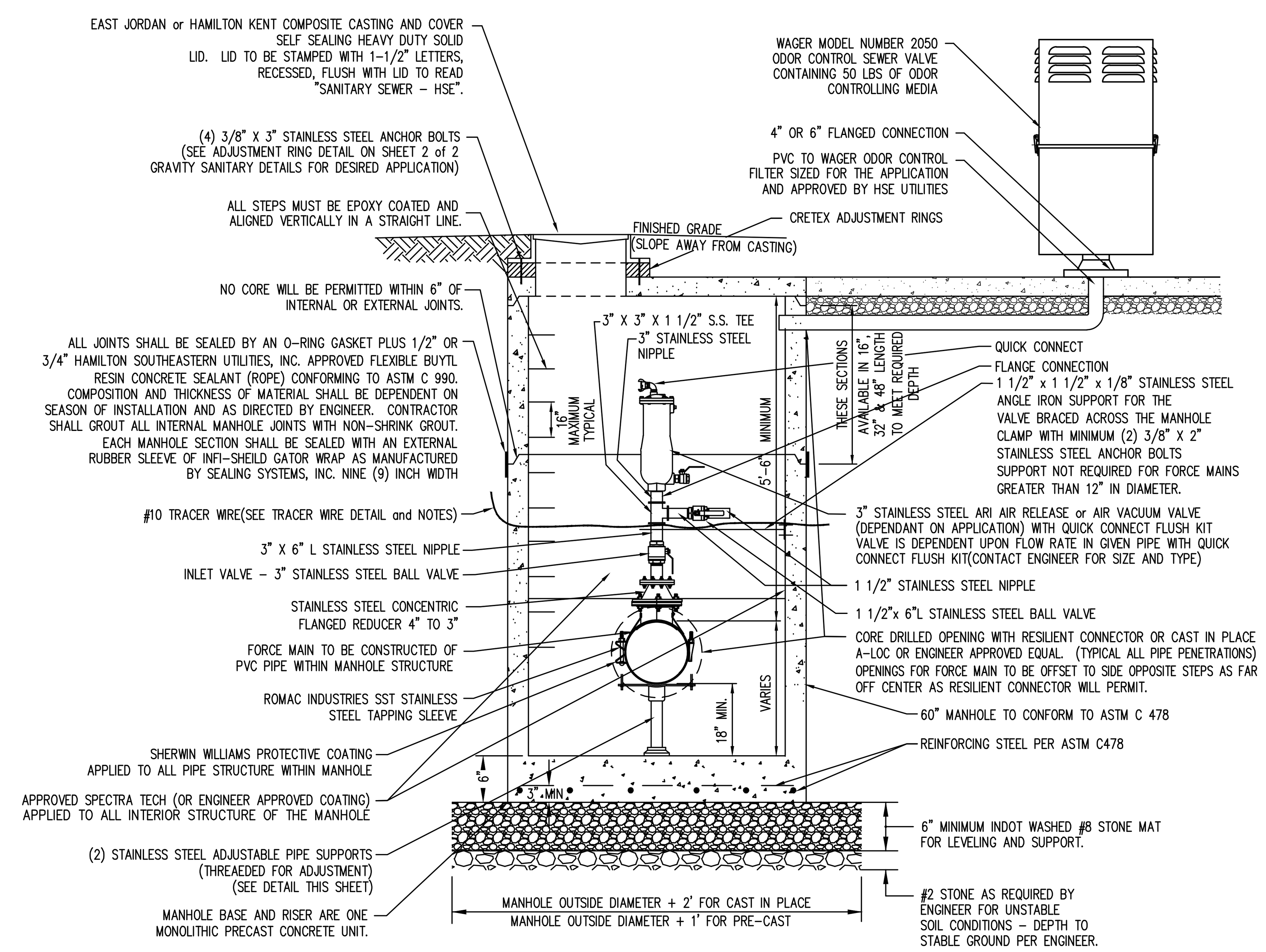

NOTES: DIMENSION "C" IS SIZE OF FORCE MAIN
CONTRACTOR TO PROVIDE OPTIONAL ValMatic CLEANING CONNECTIONS AND HOSES.

NOTE:
ALL AIR RELEASE VALVE AND CLEAN OUT MANHOLES TO BE 5'-0" IN DIAMETER

AIR/VACUUM RELEASE MANHOLE DETAIL

NO SCALE

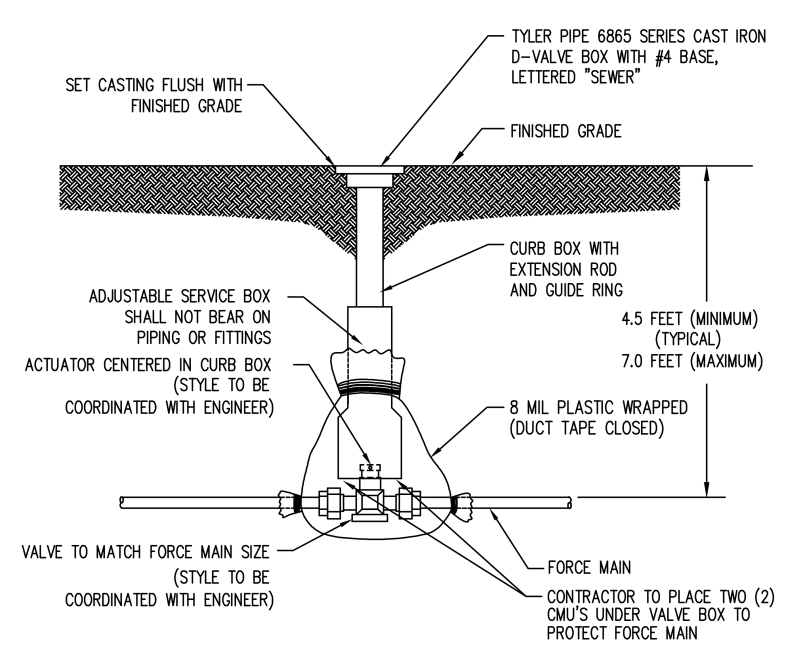

NOTE: CONTRACTOR SHALL SUPPLY TEE HANDLE ACTUATOR

ISOLATION VALVE DETAIL

NO SCALE

Dimensions

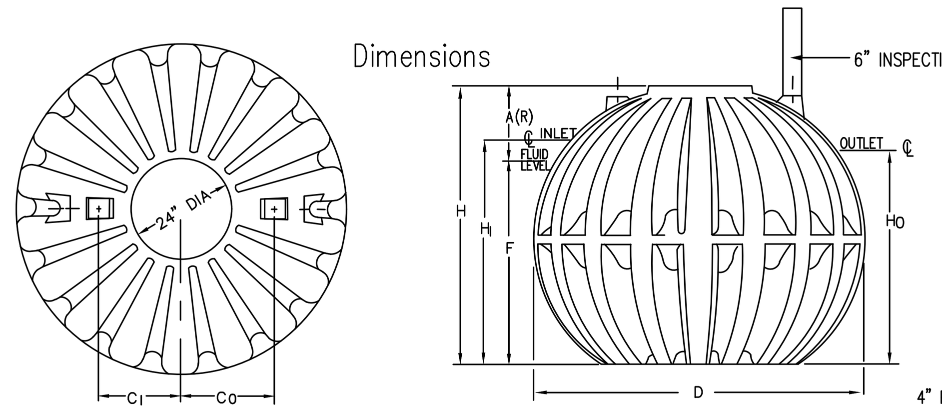

CODE	DESCRIPTION	1,000 GAL
D	Diameter	88"
H	Height	69"
HI	Inlet Height	55"
HO	Outlet height	52"
F	Fluid Level	50"
A	Airspace	19"
CL	Inlet Cleanout	23"
CO	Outlet Cleanout	27"
R	Reserve (gal.)	170

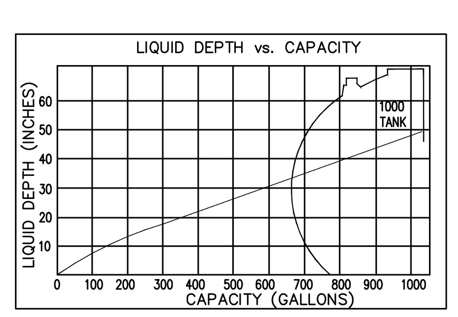

Raw Materials: Minimum Physical Properties

Property	ASTM	VALUES Cross-Linked High Density PE	Linear-Low Density PE	Units
Density (base resin)	D 1505	0.935	0.935	g/cc
Melt Index	D 1238	N/A	2.0	g/10 min.
ESCR F50, hrs Condition A, 10% Igepal	D 1693	1000	1000	hrs.
Tensile Strength Ultimate 2"/min.	D 638	2300	2300	PSI
Elongation @ Break 2"/min.	D 638	650	650	%
Vicat Softening Temp.	D 1525	230	230	°F
Brittleness Temp.	D 746	-50	-50	°C
Flexural Modulus	D 790	110,000	110,000	PSI
Izod Impact 73°F	D 256	9	3	ft.-lb./in.

NOTES:

1. SEE HSE'S SMALL DIAMETER FORCE MAIN SPECIFICATIONS SHEET FOR DETAILS OF EQUIPMENT.
2. EXTEND TRACER WIRE TO GRADE AT I & A SEPTIC TANK AND CLEANOUT AT BUILDING. COORDINATE TERMINATION OF TRACER WIRE WITH ENGINEER.

NOTE:
1) CONTROLS MAY BE LOCATED IN BUILDING (LOCATION AT OWNER'S REQUEST).
2) PROVIDE A LOCALIZED DISCONNECT IF ADJACENT TO I & A TANK.
3) DISCONNECT AND ALL ELECTRICAL CONNECTIONS MUST BE NEMA 4X.
4) DISCONNECT MUST BE OUTSIDE WITHIN DIRECT VIEW OF I & A SEPTIC TANK.

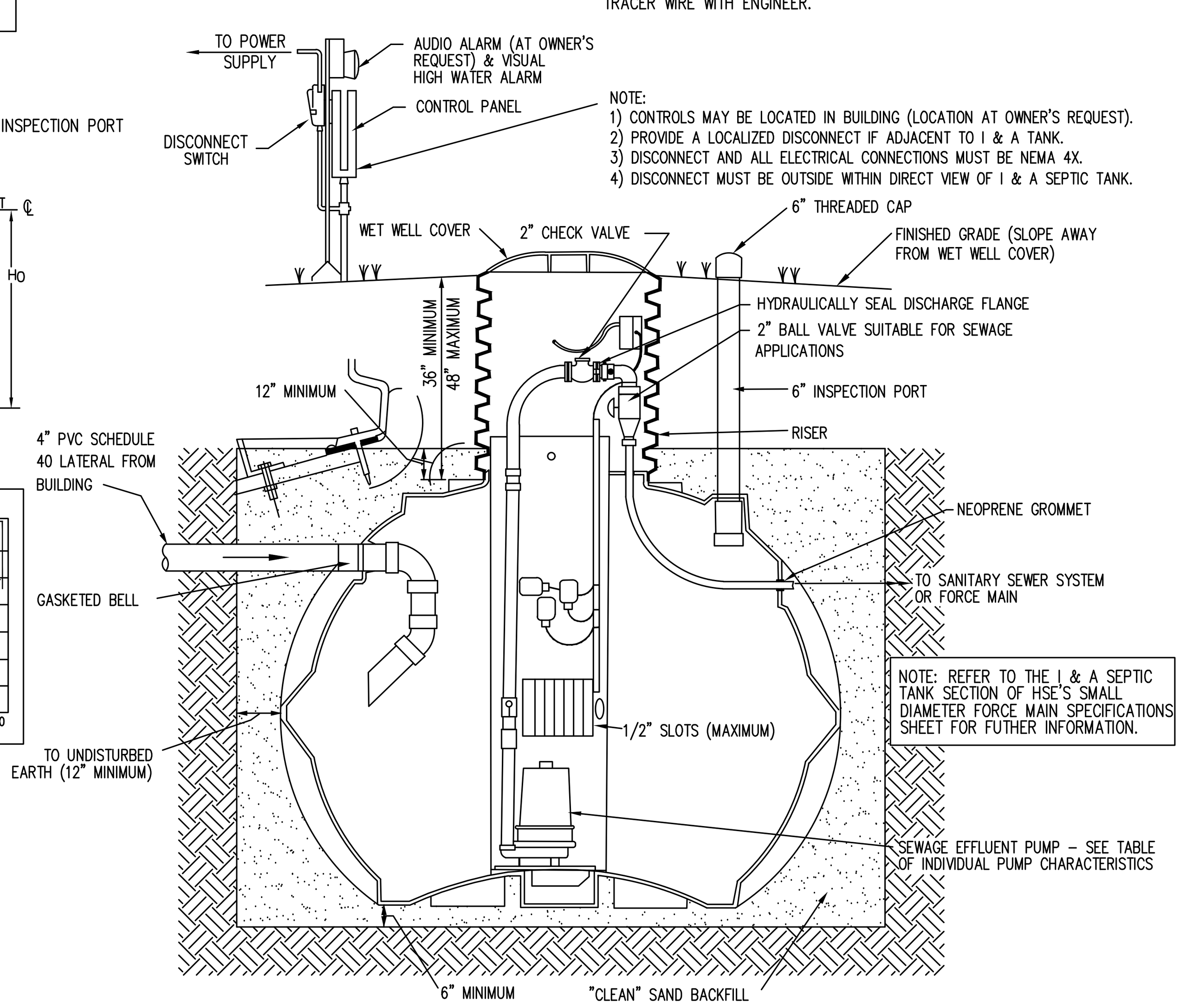

1000 GALLON I & A SEPTIC TANK DETAIL

NO SCALE

DISCLAIMER

HSE'S COMMON FORCE MAIN DETAILS AND SMALL DIAMETER FORCE MAIN SPECIFICATIONS ARE COMPLEMENTARY IN NATURE AND SHOULD NOT BE INTERPRETED INDIVIDUALLY WITHOUT REFERENCE TO THE OTHER SHEETS.

REVISED 04/26/2019

THESE DRAWINGS AND THE IDEAS, DESIGNS AND CONCEPTS CONTAINED HEREIN ARE THE EXCLUSIVE INTELLECTUAL PROPERTY OF SANITARY MANAGEMENT & ENGINEERING COMPANY, INC. AND ARE NOT TO BE USED OR REPRODUCED IN WHOLE OR IN PART, WITHOUT THE WRITTEN CONSENT OF SANITARY MANAGEMENT & ENGINEERING COMPANY, INC.
© COPYRIGHT 2018 BY SANITARY MANAGEMENT & ENGINEERING COMPANY, INC.

NOTE:
CONTRACTOR SHALL CONTACT ENGINEER PRIOR TO PURCHASING ANY EQUIPMENT FOR THIS PROJECT TO VERIFY PROPER INTERPREATION OF SPECIFICATIONS AND CONSTRUCTION PLANS.

ENGINEER
SAMCO
11905 LAKESIDE DRIVE
FISHERS, INDIANA 46038
(317) 577-1150

REVISIONS

NO.	BY	DATE	CHECK	
1	WHF	12/15/2017	TK	UPDATED FOR 2017
2	WHF	03/15/2018	TK	CHANGED 2" TO 3" ON AIR/VACUUM RELEASE MANHOLE DETAIL ADDED FLANGE CONNECTION
3	WHF	04/05/2018	TK	REMOVED DUCTILE IRON TEES FROM AIR RELEASE & CLEAN OUT DETAILS CHANGED TO ROMAC SST SLEEVE
4	WHF	04/26/2019	TK	UPDATED MANHOLE COATING VERBAGE FOR CLEAN-OUT & AIR/VACUUM RELEASE MANHOLE DETAILS

DRAWN BY DATE CHECK

CERTIFIED

SAMCO
Sanitary Management & Engineering Company, Inc.
11905 Lakeside Drive
FISHERS, INDIANA 46038
317-577-1150 Fax 317-577-3642

JOB NO.

SCALE: NO SCALE

PROJECT

PREPARED FOR

TITLE COMMON FORCE MAIN DETAILS

SHEET